Suspension Bushes
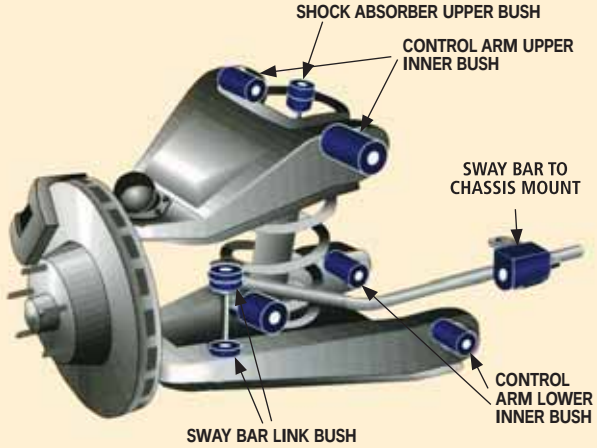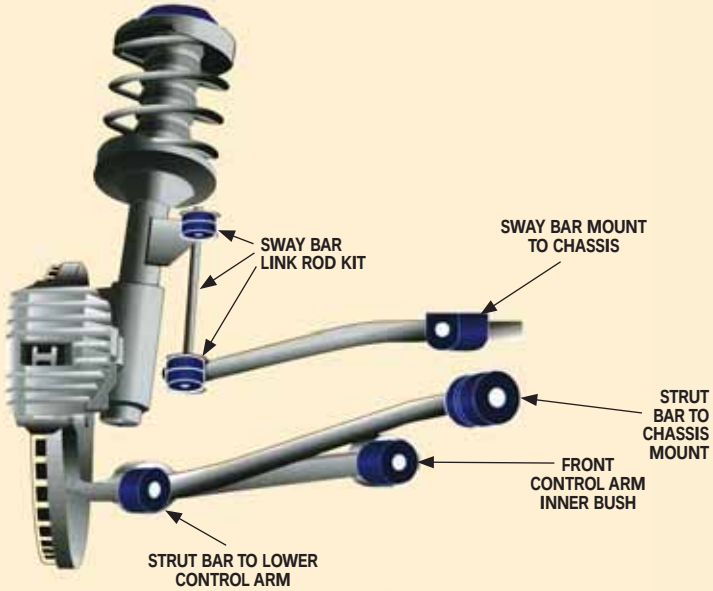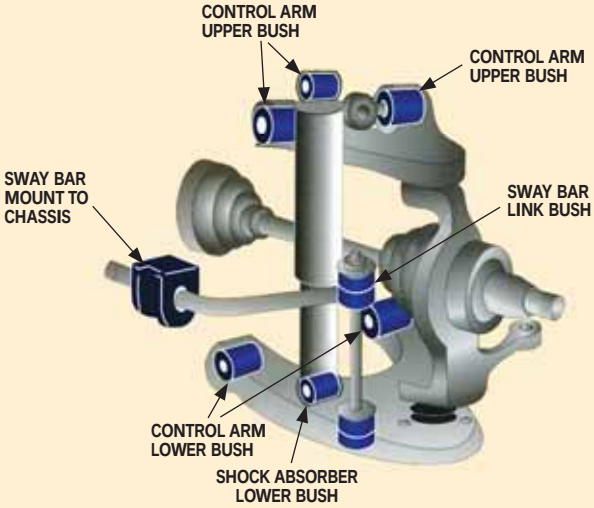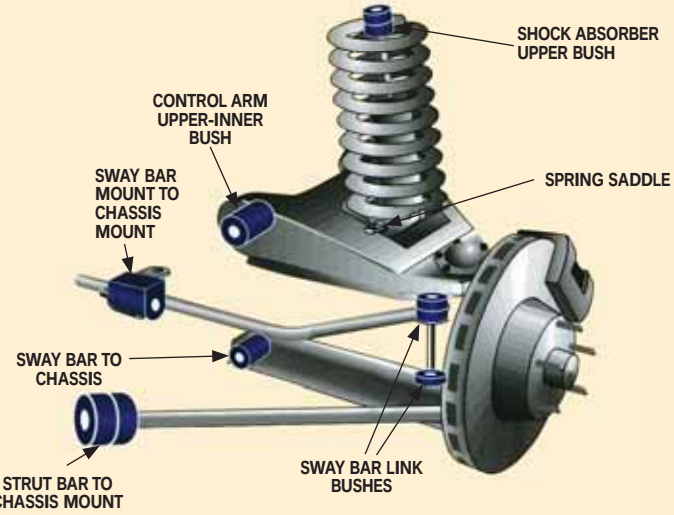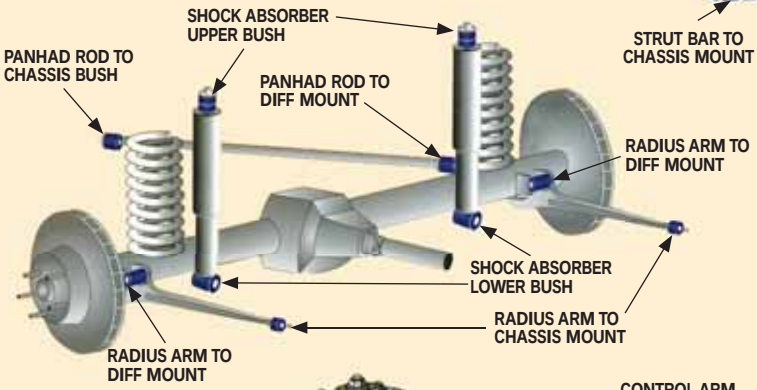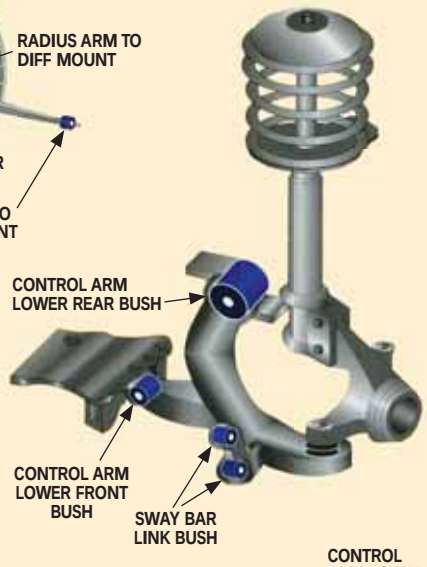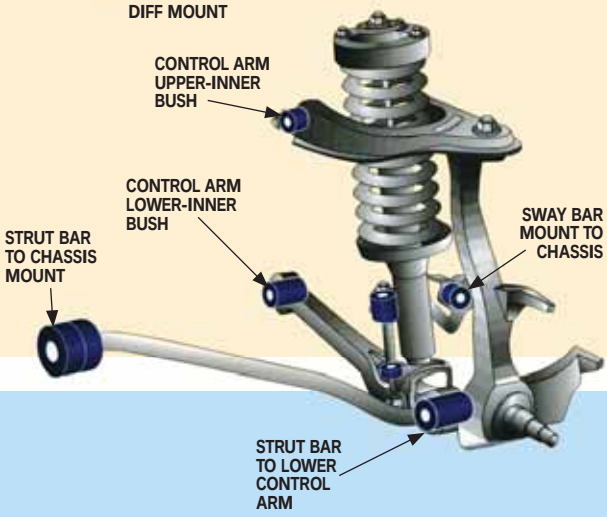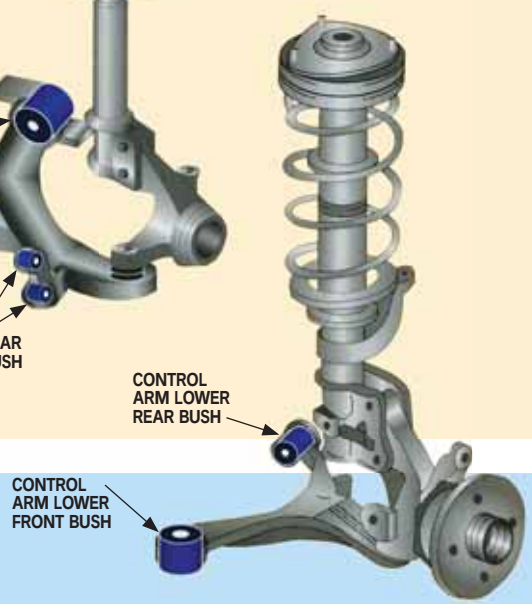
FRONT SUSPENSION INDENTIFICATION GUIDE